Strong interaction studies in antiproton annihilation (SISTINA)

- 2016 Annual Summary Document for the ISAB FAIR-RO-

1.1 Group list (physicists, staff, postdocs, students);

Name	**Position**
Alexandru-Mario BRAGADIREANU	Physicist (CS III) – IFIN-HH
Valeriu-Florin COTOROBAI	Physicist (CS III) – IFIN-HH
Dan PANTEA	Physicist (CS I) – IFIN-HH
Alin C. BROASCA	Technician – Bachelor Student (Faculty of Physics)
Nicoleta DUMITRU	Project accountant (Economist) - IFIN-HH,

1.2 Specific scientific focus of group (state physics of subfield of focus and group's role);

Physics subfields: QCD bound states, Hypernuclear Physics.

Taking into account the expertise of our group (ATLAS, EXCHARM, FOCUS, DEAR and SIDDHARTA experiments) we expressed our interest in the measurements dedicated to charmonium and exotic states and in the Hypernuclear Physics with emphasis on Ξ^- atoms were our experience in detecting X-rays coming from transitions in Kaonic exotic atoms would be beneficial for PANDA collaboration.

1.3 Summary of accomplishments during the reporting period

Since PANDA is now in the Construction phase our short term objectives were focused on the research and development activities for PANDA STT sub-detector, coordination and integration of PANDA control system(s), PANDA grid computing.

Accomplishments since September 2016:

- Development of an EPICS software Input/Output Controller for a Multipurpose Rack Control Unit (MRCU) hardware;
- Development of two graphical user software interfaces for the MRCU;
- Maintenance of local PANDA middleware and software framework.

2. Scientific accomplishments (max. 3 pages) – Results obtained during the reporting period.

The Multipurpose Rack Control Unit (MRCU) developed by our group, in Q2 of 2016, for NA62 Hadron Sampling Calorimeter control system, is a possible solution for the PANDA Control System to monitor and control the temperature and humidity of the electronics rack environment, to monitor the 230V AC current consumption of AC plugged-in devices, to switch on/off the AC plugged-in devices. Moreover, the unit has also 2 general purpose I/O ports which can be used (or customized to be used) as interlocks, and a constant current source together with a high precision ADC for RTD based temperature measurements.

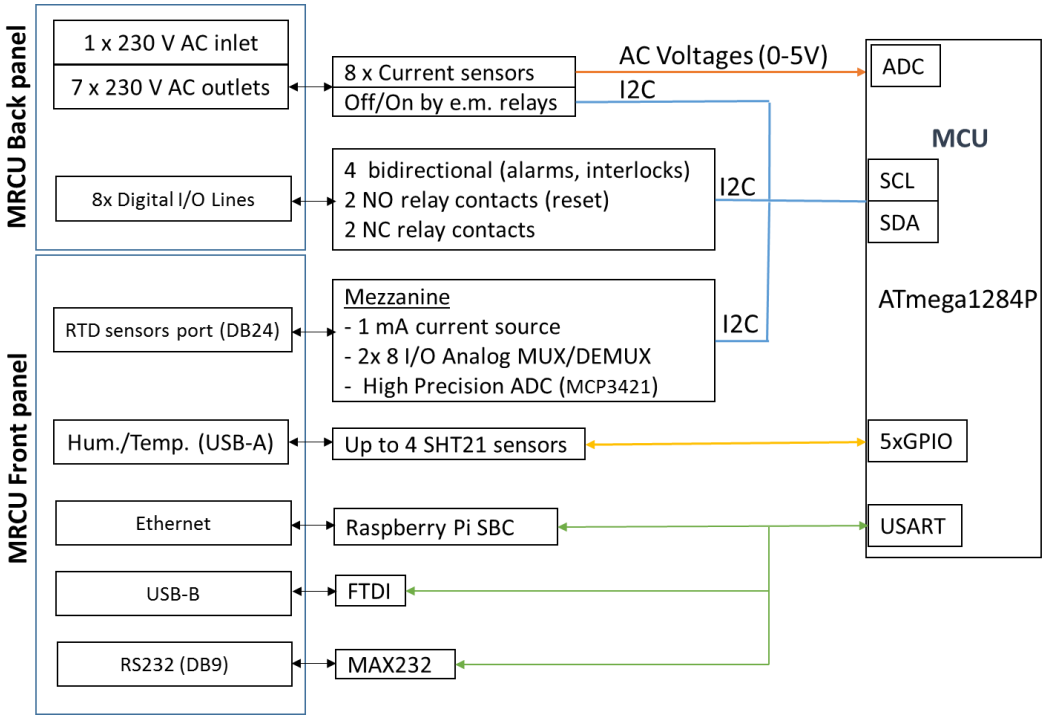

Fig. 1 Multifunction Rack Control Unit hardware architecture

Taking advantage from the fact that the communication between Atmega1284p microcontroller and the Raspberry Pi single board computer is implemented on the asyncronous serial bus the MRCU can be natively integrated in the PANDA control system using the EPICS[1] asynDriver [2]software module – for the low-level communication. The communication protocol implemented in the MRCU firmware is basically sending at client request, a stream of strings of fixed length strings which are converted in Epics Process variables using the Epics StreamDevice[3] module and a custom protocol file.

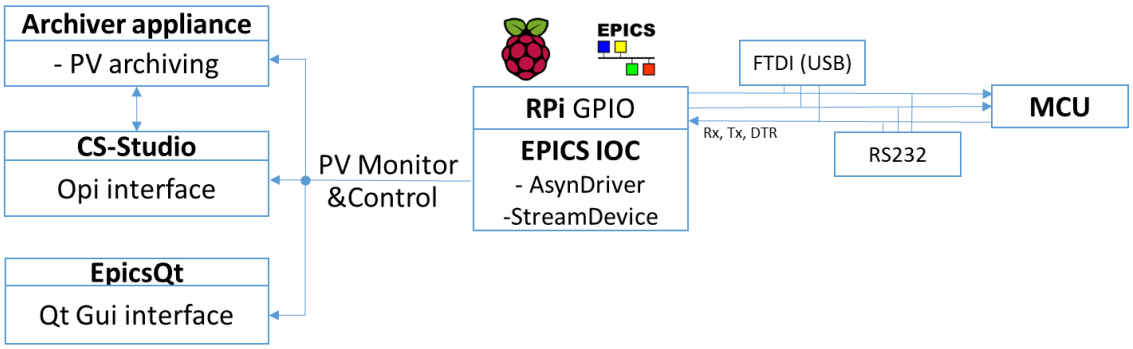

Fig. 2 Multifunction Rack Control Unit software integration in PANDA DCS

The process variables are than available for archiving, using the Epics Archiver Appliance [4] , monitor and control with two in-house developed graphical user interfaces developed in CS- Studio [5] (opi) and Qt 5.7 [6] + Epics Qt framework [7].

Fig.3 MRCU gui developed in Qt + Epics Qt framework

We decided to develop two user interfaces because, while CS Studio was adopted as a standard gui environment for PANDA DCS, Qt framework offers the advantage of portability and availability on embedded devices, thus a smart gui software can be ported directly on the MRCU RPi SBC.

In the last year, many updates were made to the components of FairSoft, FairRoot and PandaRoot. The PANDA computing coordinator has recommended that periodically the releases should be tested and installed by each PANDA group both for analysis and code development. Following the latest recommendation (from october 18, 2016), in the IFIN-HH PANDA group, we installed:

For analysis			For code development		
FairRoot	FairSoft	PandaRoot	FairRoot	FairSoft	PandaRoot
v-15.11c	jul15p7	jan16	v-16.06b	may16p1	Trunk

on CentOS 7.2.

3. Group members (table):

- List each member, his/her role in project and the Full Time Equivalent (FTE) % time in project. The FTE formula to be used is: FTE = Total number of worked hours in the last year/2040 hours*;

Name	Role	FTE
Alexandru-Mario BRAGADIREANU	Controls Software development, Hardware integration	0.15
Valeriu-Florin COTOROBAI	CSS Software development	0.5
Dan PANTEA	PANDA software framework - maintenance and support	1
Alin C. BROASCA	Software development	1
Nicoleta DUMITRU	Controls Software development, Hardware integration	0.1

- List PhD/Master students and current position/job in the institution.

- Alin Constantin BROASCA – Bachelor student, Technician

4. Deliverables in the last year related to the project:

- List of papers (journal or conference proceeding):

- List of talks of group members (title, conference or meeting, date):

  Update on PANDA–HESR interface and new (candidate) device for PANDA DCS, Detector Control System Session at PANDA CM LVII, June 8, 2016

- Other deliverables (patents, books etc.).

5. Further group activities (max. 1 page):

- Coordination of PANDA DCS;
- Chairing of PANDA DCS group;
- Maintenance of PANDA DCS Wiki page.

6. Financial Report (budget usage) for the reporting period (see the Annex).

7. Research plan and goals for the next year (max. 1 page).

PANDA Controls technical design is in an advanced stage the only untested part, from the big scheme (fig. 4), is the Database storage and retrieval.

* 2040 hours = 170 average monthly hours x 12 months

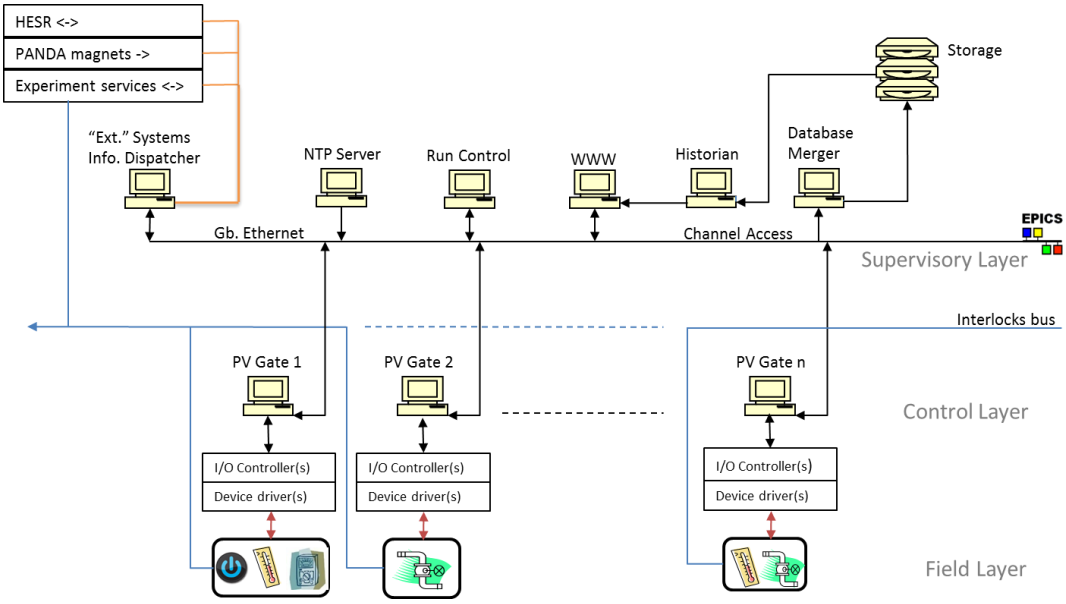

Fig.4 PANDA DCS Layers

In Q1 and Q2 of 2017 we are planning to use part of our grid storage and CPU as a *test bed* for PANDA DCS database generation, storage and retrieval before submitting the draft of Controls TDR, while in the remaining halve of 2017 we are planning to develop EPICS device support for an multipurpose DAQ card developed in-house, which can be used also by other PANDA sub-systems.

Annex

Financial Report

according to the regulations from H.G. 134/2011

			lei
Type of expenditures		**Year 2016**	
		Value	
		Planned	**Realized**
1	**PERSONNEL EXPENDITURES**, from which:	**39,097.00**	**39,995.37**
	1.1. wages and similar income, according to the law	31,825.00	32,556.00
	1.2. contributions related to wages and assimilated incomes	7,272.00	7,439.37
2	**LOGISTICS EXPENDITURES**, from which:	**1,018.00**	**0,00**
	2.1. capital expenditures	0.00	0.00
	2.2. stocks expenditures	1,018.00	0.00
	2.3. expenditures on services performed by third parties, including:	0.00	0.00
3	**TRAVEL EXPENDITURES**	**4,800.00**	**4,792.70**
4	**INDIRECT EXPENDITURES – (OVERHEADS) ***	**21,585.00**	**21,711.93**
TOTAL EXPENDITURES *(1+2+3+4)*		**66,500.00**	**66,500.00**

* Specify the rate (%) and key of distribution (excluding capital expenditures).
Indirect Expenditures = General IFIN-HH Overheads (35% from 1+ 2.2 +2.3 +3) + Particle Physics Department Overheads (15.0192 % from 1)

.

[1] Experimental Physics and Industrial Control System, http://www.aps.anl.gov/epics/
[2] asynDriver: Asynchronous Driver Support, http://www.aps.anl.gov/epics/modules/soft/asyn/
[3] StreamDevice2, http://epics.web.psi.ch/software/streamdevice/
[4] Epics Archiver Appliance, https://slacmshankar.github.io/epicsarchiver_docs/details.html
[5] Control Systems Studio, https://github.com/ControlSystemStudio/cs-studio
[6] Cross-platform software development for embedded & desktop, https://www.qt.io/
[7] Epics Qt framework, https://sourceforge.net/projects/epicsqt/